Crown Alert Rig Up Diagram

Shown With Backup Power, Remote Buzzer, Upper Limit, Warning Limit, Floor Saver, B.O.P., Eaton Temp & Flow Alarm.

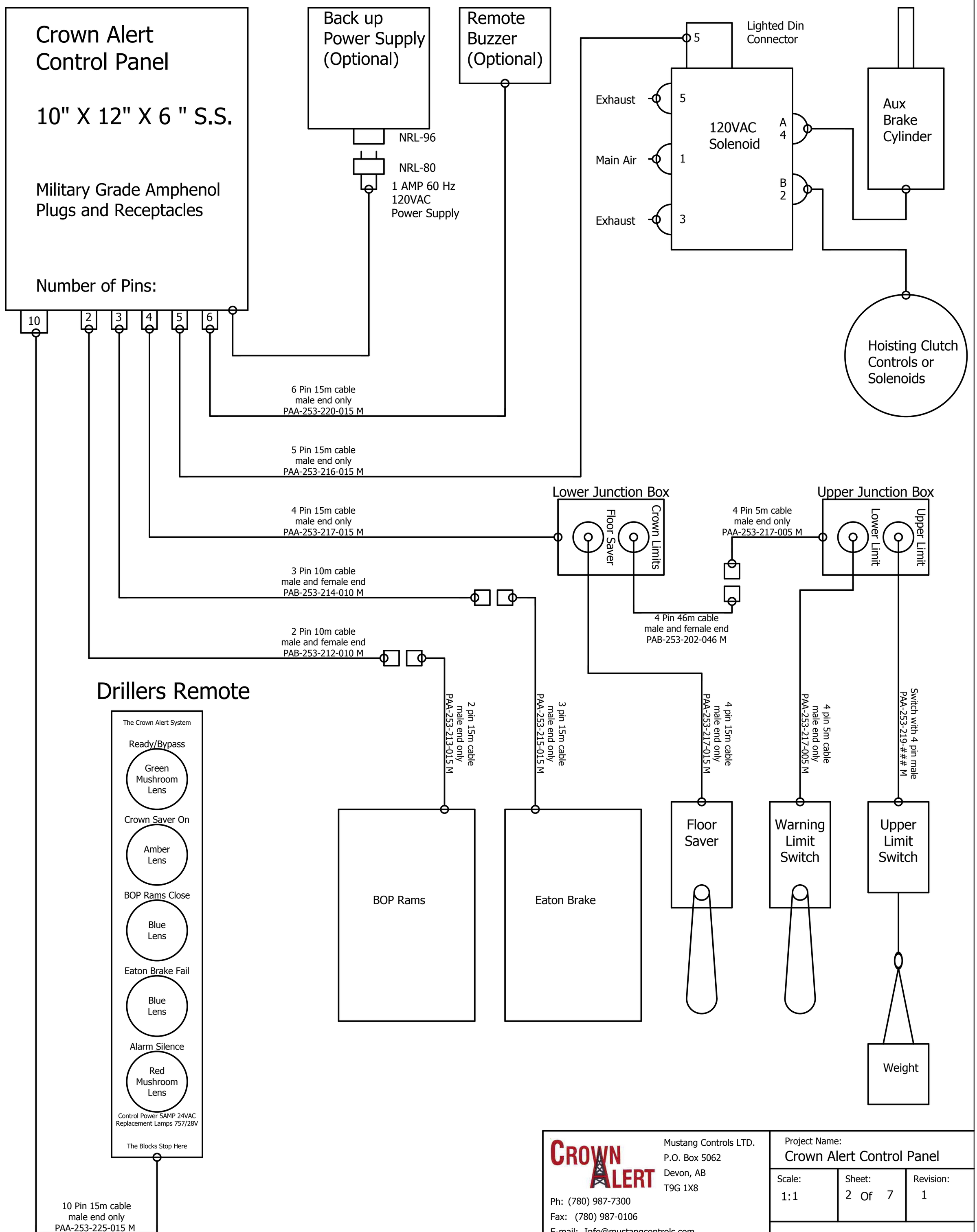

Mustang Controls LTD.
P.O. Box 5062
Devon, AB
T9G 1X8
Ph: (780) 987-7300
Fax: (780) 987-0106
E-mail: Info@mustangcontrols.com

Project Name: Crown Alert Control Panel		
Scale: 1:1	Sheet: 2 Of 7	Revision: 1
Last Change: 2009.05.13		
Job Number: Generation 1	Checked By:	